Joint General Purpose Bomb Insensitive Munitions Program

Presentation for

National **D**efense **I**ndustrial **A**ssociation
Insensitive **M**unitions **E**uropean **M**anufacturers **G**roup
2006 Insensitive Munitions & Energetic Materials Technology Symposium

By

Stephen Kelley, US Air Force Lead Engineer

Air Armament Center, Air to Ground Munitions Systems Wing, Eglin AFB, FL

&

Fred Becker, US Navy Project Manager

Precision Strike Weapons, NAWC-WD, Pt. Mugu, CA

Classification of Presentation and Paper: Unclassified

Background

The Insensitive Munitions program for General Purpose Bombs (2000 lb., 1000 lb., and 500 lb.) used by the U.S. Air Force and Navy has been underway for several years and has undergone significant development, testing, and design modifications. The US Navy began a serious effort to eliminate TNT from ship borne munitions and improve IM characteristics of GP bombs during the 1980s, concluding in 1999 with the MK-84, 2000 lb warhead. The warhead explosive payload was changed from H-6 to PBXN-109 and a thermal protective coating was applied to the exterior surface of the warheads. The warheads, designated the BLU-117, BLU-110, and BLU-111 respectively were subjected to IM tests environmental vibration, temperature & humidity, and 40-foot drop tests as defined in MIL-STD-810 and MIL-STD-2105.

For reference, the BLU-117 C/B configuration passed the environmental testing and resulted in a Type V (burn) reaction in the fragment impact IM test, and Type IV (deflagration) reactions in the cook off tests and bullet impact. This was accepted by the Navy as an IM improvement over the standard MK-84 configuration and eliminated the TNT ingredient in the explosive payload.

During 2000, the US Office of the Secretary of Defense (OSD) directed the services to revisit their munitions portfolios with regard to achieving IM compliance and

stipulated that ongoing production contracts were wavered but that new acquisition contracts MUST improve the IM characteristics until they meet all IM criteria.

The US Air Force Research Laboratory (AFRL), Munitions Directorate began a serious effort, looking at available and emerging technologies to improve the IM characteristics of GP bombs. Much of the effort focused on a more insensitive explosive fill that would be a melt-pour substance similar to tritonal being used in the Air Force GP warheads. In 2002, the improvement effort moved from the laboratory into an acquisition effort to purchase warheads with as much IM compliance as possible. This led to investigations to improve the warhead case and incorporate the safest explosive fill possible without compromising performance.

In response to the OSD directives on IM compliance, the US Navy also undertook a separate program to improve the IM performance of their family of GP warheads (BLU-111, BLU-110, and BLU-117). The Navy Insensitive Munitions Technology Transition Program (IMTTP) proposed technologies that appeared mature to providing near term incremental improvements without fostering a change to their explosive, PBXN-109.

During regular meetings of the Department of Defense Insensitive Munitions Integrated Product Team (DoD IM IPT) the duplication of effort by the Air Force and Navy was recognized and a consolidation of programs was directed. A joint Program Plan was coordinated, signed, and efforts were merged into a joint GP Bomb Insensitive Munitions Program. The USAF was responsible for design and testing of the 2000 lb. bomb and the Navy was responsible for 1000 and 500 lb. bombs. The goal of the program remains to pass all IM standard tests while the acceptable threshold has been to incrementally improve the IM performance, while not adversely affecting current capabilities. Due to requirements to maintain guidance/tail kit/fuze compatibility, lethality/effectiveness, and logistics processes, the program has focused on development of an improved explosive fill in conjunction with venting modifications to the bomb case.

In parallel, a number of case design features to pass the IM tests have been explored by the Air Force and Navy. Design options investigated include a variety of base plate vents, longitudinal case stress risers, liner additives, fuzewell stress risers, along with variations in filling processes and dimensions.

Warhead Case Design

The initial MK-84 IM design contractor evaluated proposed technology available at the time and developed several case design alternatives, recommending:

- Base plate vents; eight holes put into the existing MK-84 base plate, intended primarily for fast and slow cook-off performance, hole area calculated based on the explosive burn rate. Polyethylene plugs screw into

the holes from inside the plate, and are designed to melt and/or be pushed out under pressure.

- Modified fuzewells; incorporating a small stress riser along the length of the fuzewell to enable crushing under predictable pressure – adding an additional venting path.
- Case stress risers along the sides of the bomb, to allow a last-resort venting path should pressures build beyond the ability of other venting paths.

Slow Cook Off /Fast Cook Off Vent Port Design

The rear vent design began as a series of round vent ports filled with UHMW polyethylene (UV stabilized) which was compatible with explosive fill materials. These were designed to soften at pre-determined temperature and/or pressure allowing pressure venting and explosive extrusion where it could burn harmlessly outside the warhead case.

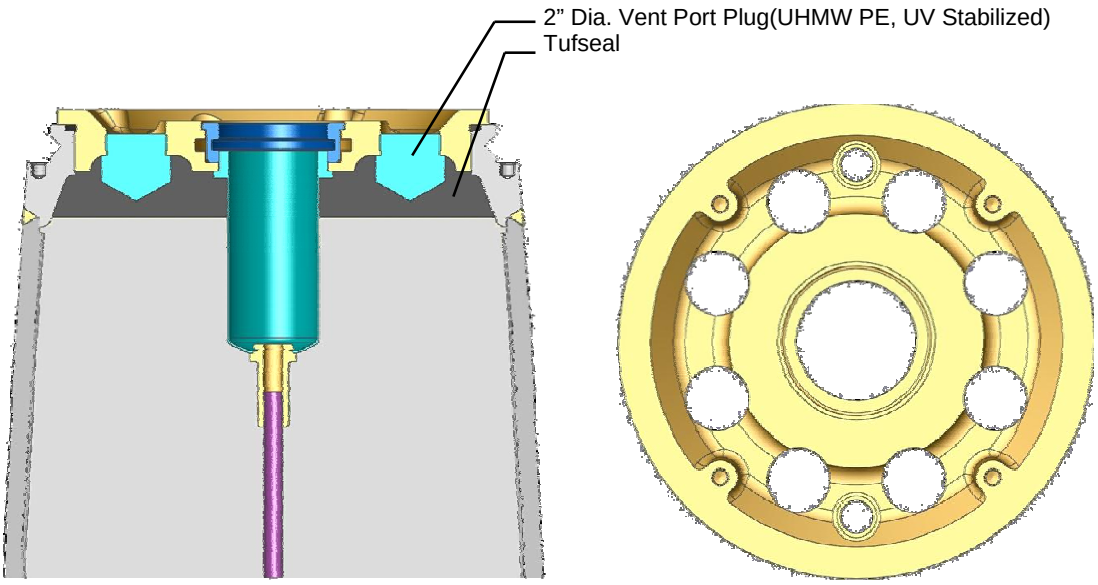

During testing, the plugs released at different stages and occasionally were propelled beyond acceptable IM distance criteria. As a result, there was inadequate vent area during fast cook-off tests. Liner additives were found to assist in the opening of vents but proved too challenging for transition to production. The rear closure plate design has evolved to a common case venting design approach developed by the US Navy that allows larger vent ports around the fuze well.

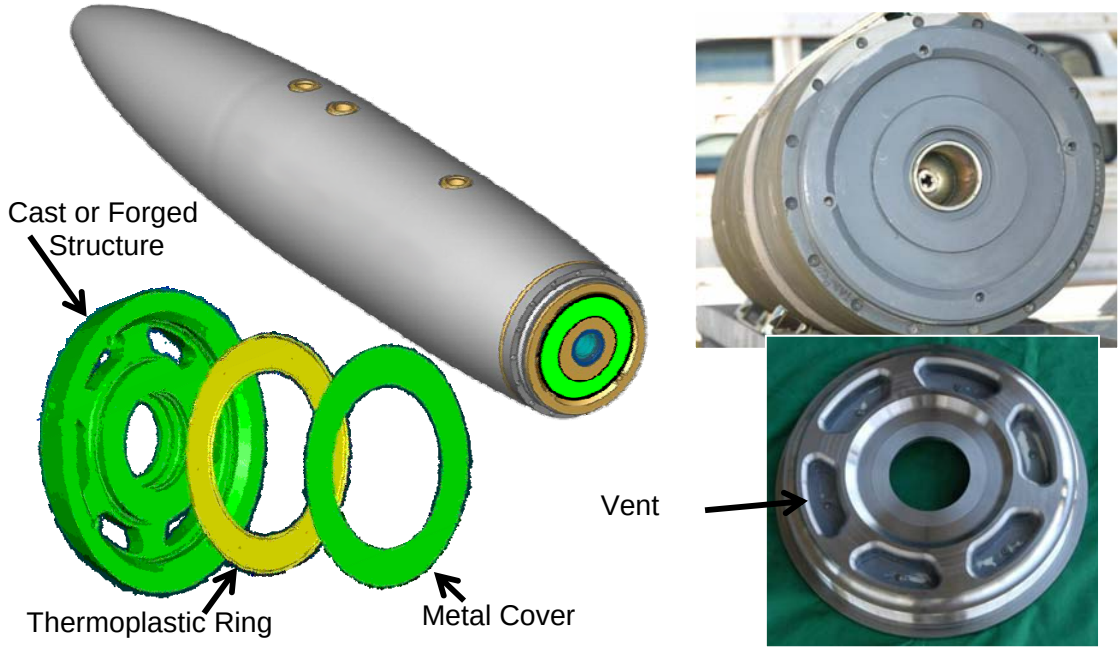

This design has been tested on both the 2000 lb. MK-84 (BLU-117) and 500 lb. MK-82 (BLU-111) with excellent results in Fast and Slow Cook-Offs.

Modified Fuzewell Design

A single score line on the fuzewells (front and rear) allows an alternative pressure relief path during a cook-off stimulus.

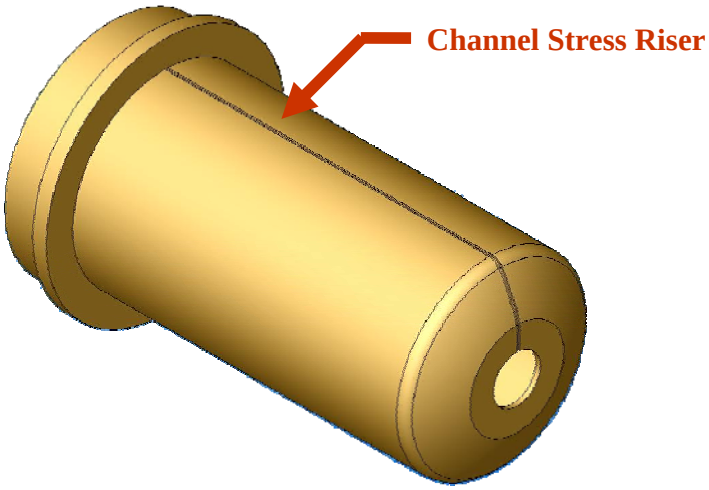

The modified fuzewells; have collapsed under pressure and provided an additional venting path during cook-off tests where there was no fuze installed and where there was not a steel nose plug in the warhead. Some of the tests have been done with a fuze in the rear fuzewell which precludes the collapse of the fuzewell housing, but other venting has prevented pressure runaway and detonation.

Air Force Longitudinal Case Stress Riser Design

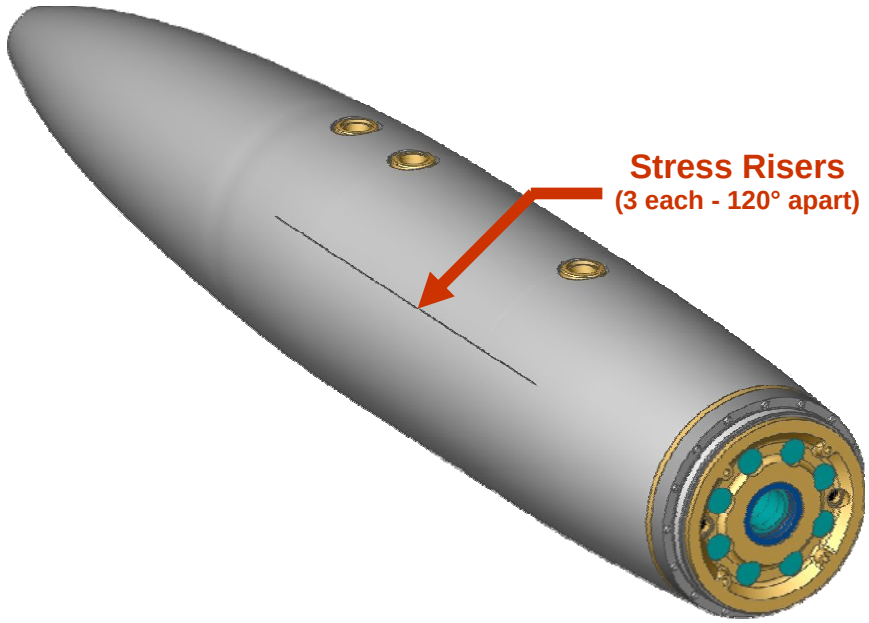

The longitudinal case stress risers were rejected during early tests since they were not consistently activated before the rear base plate assembly was ejected from the weapon.

Explosive Fill

Continuing research by the AFRL Munitions Directorate has been improving the performance of insensitive explosives resulting in the development of a melt-cast fill, designated MNX-795, tentatively selected to be used as a common fill for all GP bombs. Cost of the ingredients and upgrades to the ammunition plant facilities has the Navy re-examining its use of PBXN-109 coupled with the new vented rear plate assembly.

MK-84 (BLU-117) with MNX-795 performance to date in the IM Test series includes:

Fast Cook-off	Slow Cook-off	Bullet Impact	Fragment Impact	Shape Charge Jet	Sympathetic Detonation
Type V (Burn)	Type V (Burn)	Type VI (none) for 7.62mm Type III (explosion) for 50 Cal	TBD	TBD	TBD

Conclusions

Although the design changes do not allow the 2000 lb. MK-84 (BLU-117) to pass all IM tests yet, the results represent a significant improvement over current Air Force warheads using Tritonal, and incremental improvement of Navy warheads using PBXN-109. IM testing of the 500 lb. MK-82 (BLU-111) and 1000 lb. MK-83 (BLU-110) is still in process. In addition to the improvement in the IM performance, the melt-cast properties of the new explosive, MNX-795, enable an increase in production throughput during explosive filling over cast-cure PBXN-109. Initial indications suggest that the new explosive also offers an increase in blast performance over both current explosives.

Authors:

Stephen Kelley,
AGMSW/AASG/JMIS
102 West D. Ave Suite 229
Eglin AFB, Florida 32542
Email: Stephen.kelley@eglin.af.mil
Voice telephone: (850) 883-3231
FAX: (850) 882-7983

Manfred “Fred” Becker
US Navy GP Bomb IM Project Manager
Precision Strike Weapons, NAWC-WD
Pt. Mugu, CA 93042
Email: manfred.becker@navy.mil
Voice telephone: (805) 484-6418 (office)